C.I.P.

7,62 x 39

Country of Origin: SU

TAB.	I
Date	89-01-04
Revision	13-05-22

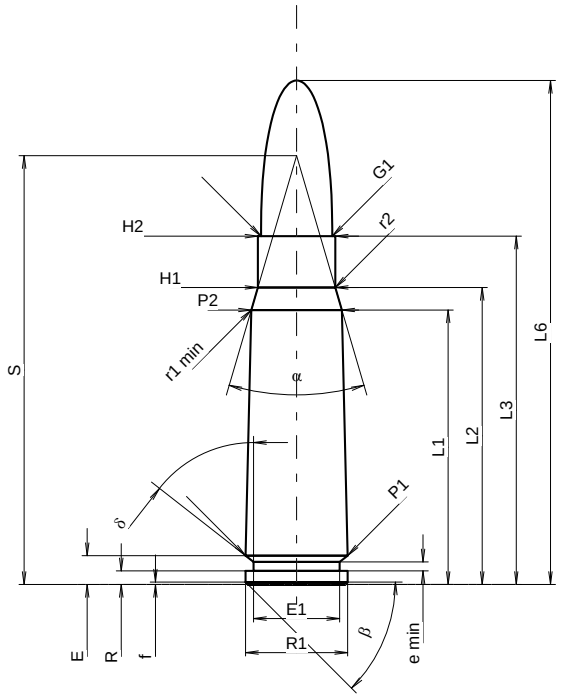

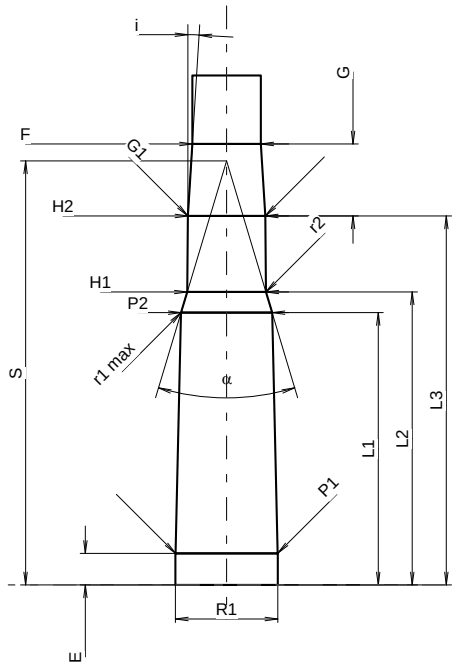

Scale 1.19:1

CARTRIDGE MAXI

Lengths

L1 1)*	=	30.50	-0.20
L2 1)*	=	33.00	-0.20
L3 1)	=	38.70	
L4	=		
L5	=		
L6	=	56.00	

Case Head

R	=	1.50
R1	=	11.35
R3	=	
E	=	3.20
E1	=	9.56
e min	=	1.00
δ	=	51°58'12"
f	=	0.25
β	=	45°

Powder Chamber

P1	=	11.35	
P2 1)*	=	10.07	-0.20

Junction Cone

α	=	32°46'
S	=	47.63
r1 min	=	4.00
r2	=	3.00

Collar

H1 *	=	8.60
H2 1)	=	8.60

Projectile

G1 1)	=	7.92
G2	=	
F	=	
L3+G 1)	=	46.70

Pressures (Energies)
Method Transducer

Pmax	=	3550	bar
PK	=	4083	bar
PE	=	4440	bar
M	=	25.00	
EE	=	2510	Joule

Miscellaneous Dimensions

Fe 1)3)	=	0.15
delta L	=	0.20

CHAMBER MINI

Lengths

L1 *	=	30.25
L2 *	=	32.55
L3 1)	=	41.00

Breech

R	=	1.50
R1	=	11.37
R2	=	
R3	=	
r	=	

Powder Chamber

E	=	3.50
P1 1)	=	11.36
P2 *	=	10.12

Junction Cone

α 1)	=	33°23'54"
S	=	47.12
r1 max	=	0.50
r2	=	3.00

Collar

H1 *	=	8.74
H2 1)	=	8.60

Commencement of Rifling

G1 1)*	=	8.60
G 1)*	=	8.00
α1	=	
h	=	
s	=	
i 1)	=	3°30'18"
w	=	

Barrel

F 1)*	=	7.62
Z 1)	=	7.92

Grooves

b	=	3.81	
N	=	4	
u	=	240.00	
Q	=	47.99	mm²

Dimensions in << mm >>
Dimensions and Tolerances for Proof Barrels
see Appendix CR 1.

Notes:
1) Check for safety reasons
3) Headspace on Shoulder
* Basic dimensions